MATRIX 630003947

body components

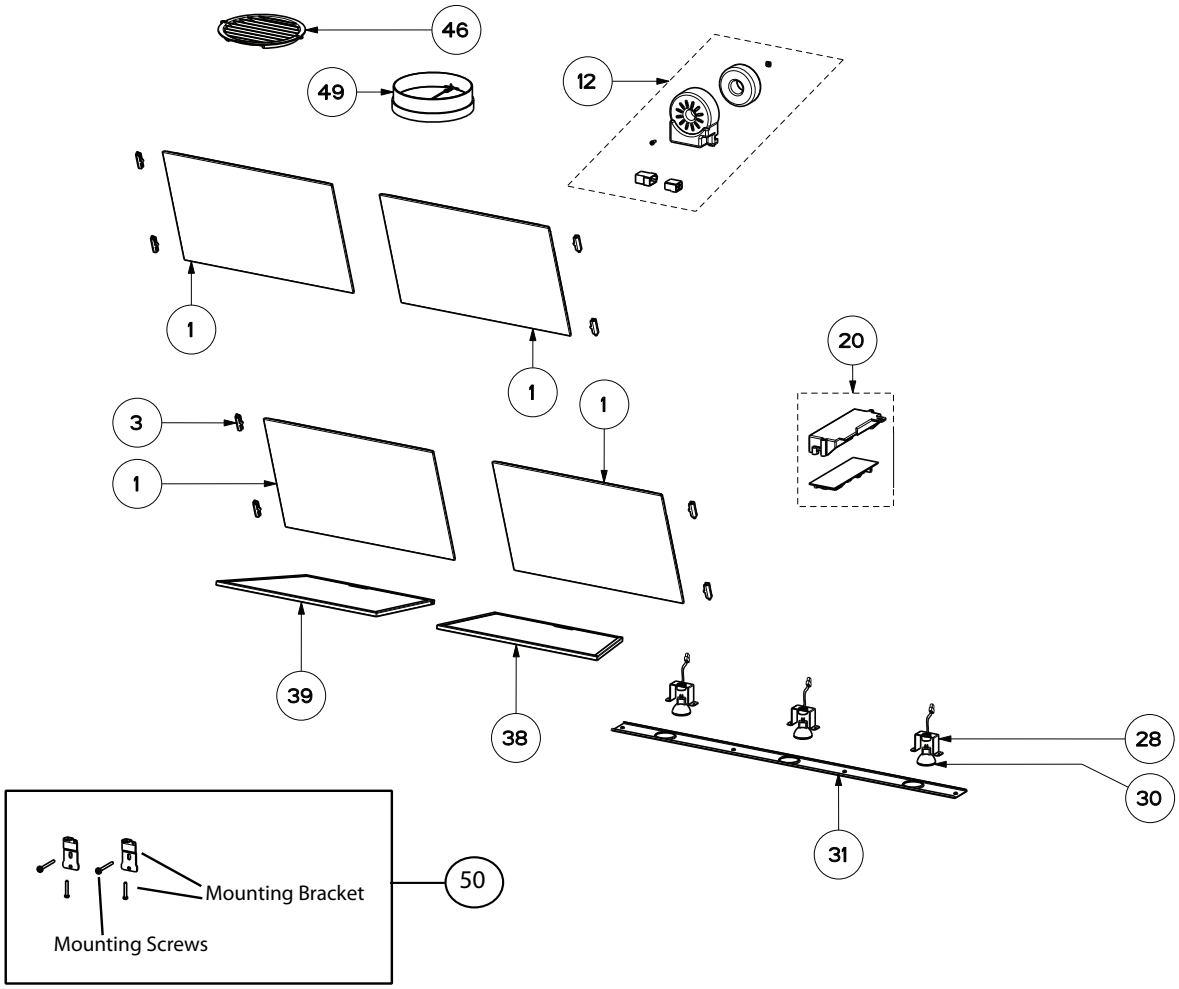

	Model Number	630003947	
Key	Description	36	Qty Req.
1	Panel Kit (2)	133.0058.739	2
3	Panel hinge (2)	133.0057.285	2
12	transformer kit	133.0053.047	1
20	control board kit	133.0068.107	1
28	lamp holder	133.0056.189	3
30	Halogen Lamp	133.0046.418	3
31	Light Frame Panel	133.0058.742	1
38	Grease Filter (DX)	133.0017.021	1
39	Grease Filter (SX)	133.0017.020	1
46	Ductless Vent Grate	133.0016.965	1
49	Damper	133.0055.994	1
50	Mounting Kit Matrix	133.0084.484	1

MATRIX 630003947

control components

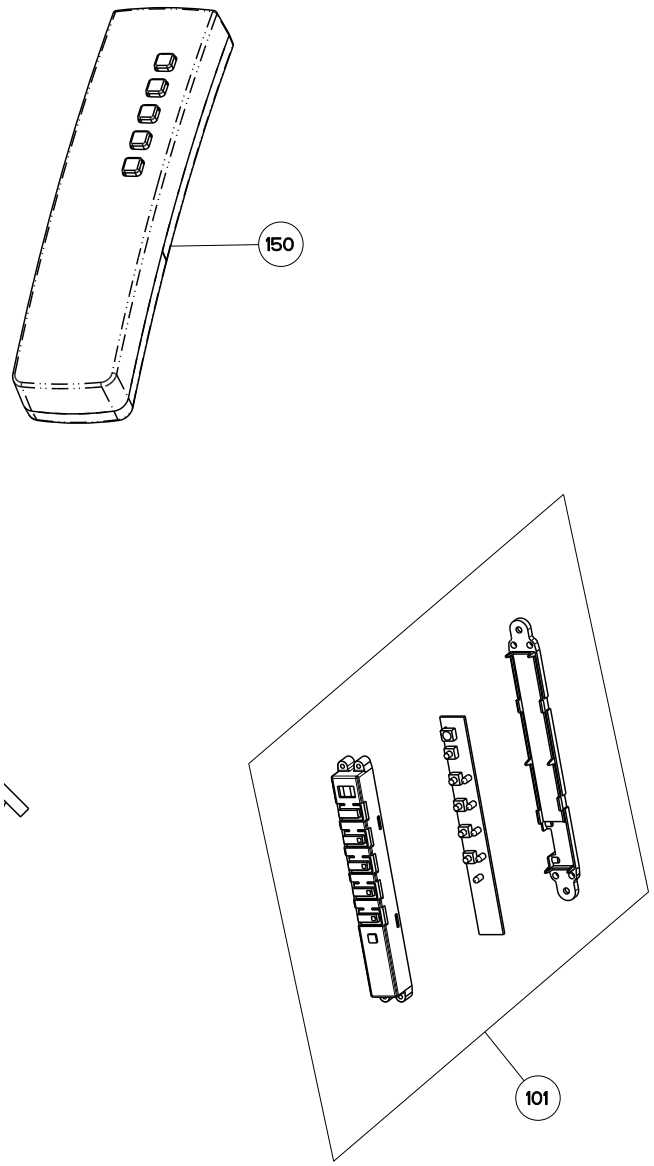

	Model Number	630003947	
Key	Description	36	Qty Req.
101	Switchboard kit	133.0018.522	1
150	Remote Control	133.0068.109	1

MATRIX 630003947

motor components

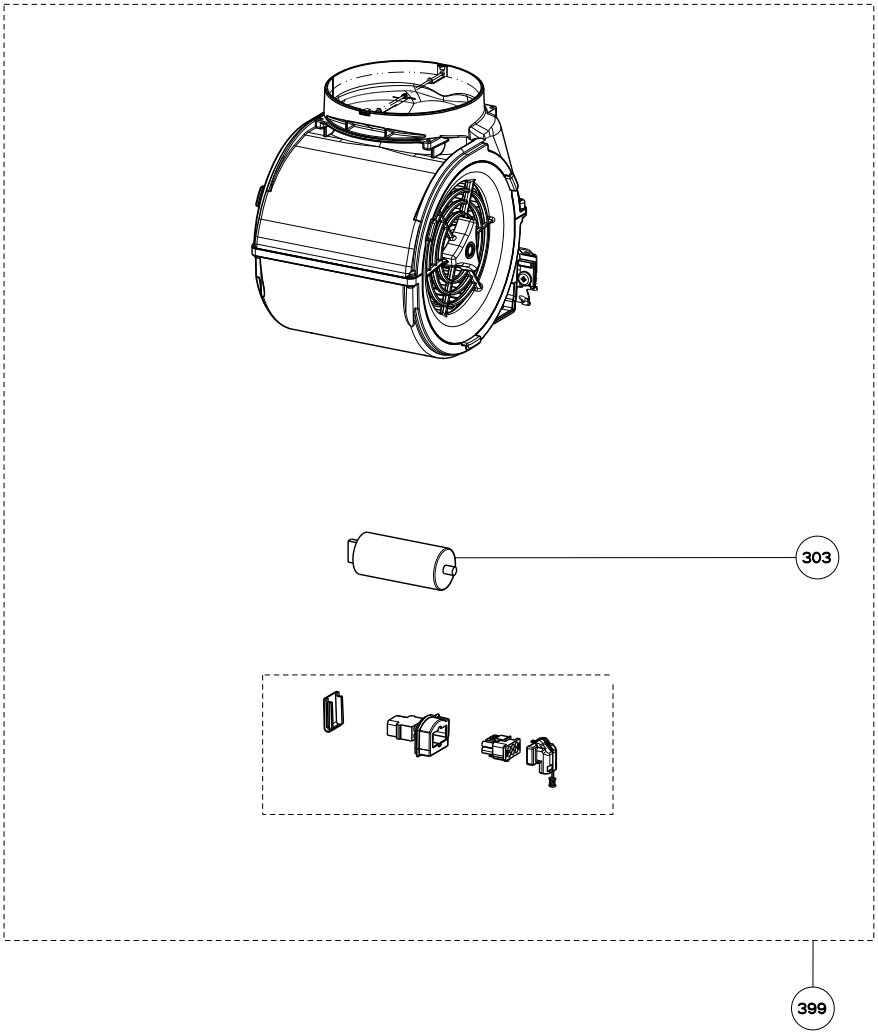

	Model Number	630003947	
Key	Description	36	Qty Req.
303	Capacitor	133.0056.183	1
399	motor group	133.0056.182	1